ULTIMATE POWER SOLUTION (FZC)

The world's best dealer for Power Generation, Control System, & Power Solution

POWERED BY: Perkins | LEROY SOMER ALTERNATOR

53 KVA 3 PHASE — **60 Hz**

50 Hz — **45 KVA** 3 PHASE

GENERATING SET MODEL (UPSP53)

Output Ratings	Prime	Standby
380-415 V, 3ph, 50 Hz, 1500 rpm	45 KVA	50 KVA
	36 KW	40 KW
380-415 V, 3ph, 60 Hz, 1800 rpm	53 KVA	59 KVA
	43 KW	47 KW

ENGINE / TECHNICAL DATA

Ratings at 0.8 Power Factor

Engine Make			PERKINS
Engine Model			1103A-33TG1
Governing Type			Mechanical
Number of Cylinder/ Arrangement			3/ Vertical in-line
Bore and Stroke (mm)			105 mm x 127 mm
Compression Ratio			17.25 : 1
Displacement (L)			3.3 L
Aspiration/ Cooling			Turbocharged/ Water cooled
Combustion System			Direct Injection
Rotation from Flywheel End			Anti-clockwise
Total Lubrication System Capacity			8.3 L
Total Coolant Capacity			10.2 L
Cycle			4 stroke
Frequency and Engine Speed		50 Hz / 1500 rpm	60 Hz / 1800 rpm
Fuel Consumption	**@50% load**	220 g/kWh	237 g/kWh
	@75% load	209 g/kWh	218 g/kWh
	@100% load	207 g/kWh	212 g/kWh
	@110% load	211 g/kWh	215 g/kWh
Exhaust temperature		492-537°C	510-551°C

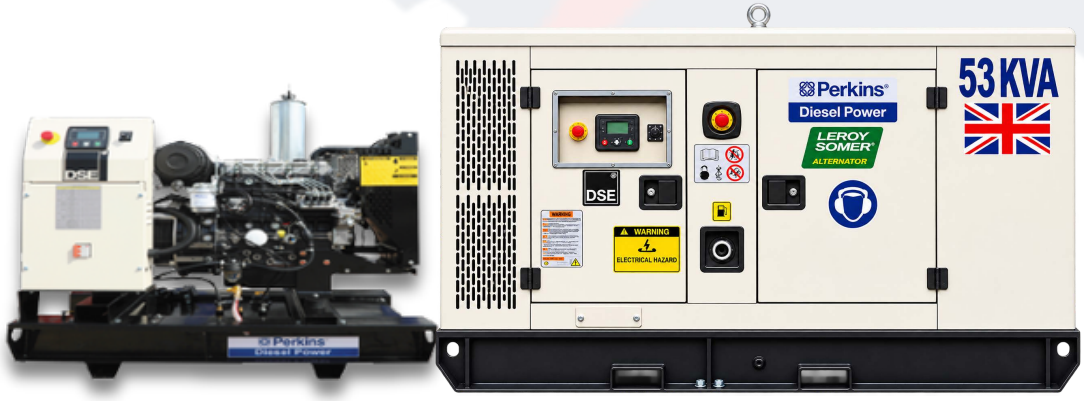

ALTERNATOR

Make	UPS / Leroy Somer(TAL)
Model	UPS224G/ TAL042F
No. of bearings	1
Insulation	H
Exciter Type	SHUNT
Wires	6/12
Degree of protection	IP23
Winding Pitch	2/3
Overspeed	2250 mn
Voltage Regulation	±1%

CONTROL PANEL

Make	DeepSea
Model	4110/20 SERIES

The DSE 4110/20 Seeries., is an Auto Start Control for single genset application. It includes a LCD display which clearly shows the status of engine all the times. This module can either programmed using the front panel or by using configuraton sale PC software.

Metering and Alarm Indications:

- Generator frequency
- UnderSpeed, Overspeed
- Generator volts (L-L, L-N)
- Generator current
- Engine oil pressure
- Engine coolant temperature
- Hours run counter
- Battery volts
- Fail to start/stop
- Emergency stop
- Failed to reach loading voltage/frequency
- Charge fail
- LOW DC voltage
- CAN diagnostic and CAN fail/error

CERTIFIED BY: IEC, UL CERTIFIED, ISO 9001:2015, ISO 14001:2015, CE MARK CERTIFICATION IQS, RoHS COMPLIANT

Tel: +971 6 5570722
Fax: +971 6 5570733
P.O. Box: 122333
F3-18, Sharjah Airport Free Zone (SAIF Zone)
E-mail: info@upsgenerator.com
Web: www.upsgenerator.com

STANDARD SPECIFICATIONS

53 KVA
3 PHASE
60 Hz

50 Hz
45 KVA
3 PHASE

1. ENGINE

Perkins four stroke heavy duty high performance industrial type diesel engine.

2. ENGINE FILTERATION SYSTEM

- Cartridge type dry air filter.
- Cartridge type fuel filters.
- Full flow lube oil filter.

All filters have replaceable elements.

3. COOLING RADIATOR

Radiator and cooling fan, complete with safety guards, designed to cool the engine at high ambient temperatures (consult your dealer for de-ration factors)

4. EXHAUST SYSTEM

Exhaust gas flow	7-9.5 m³/min
Maximum allowable back pressure	10-15 (kPa)

5. CIRCUIT BREAKER TYPE

3 pole MCCB. (4 pole is optional)

6. Fuel System

The baseframe design is incorporated with an integral fuel tank with a capacity of approx. 8 hours runningat Full Load. The tank is supplied complete with fill cap breather, fuel feed and return lines to the Engine and drain plug.

7. ALTERNATOR

7.1 INSULATION SYSTEM

- The insulation system is Class H.
- All windings are impregnated in either a triple dip thermosetting liquid, oil and acid resisting polyester varnish or vacuum pressure impregnated with a special polyesterresin.
- Heavy coat of antitracking varnish additional protection against moisture or condensation.

7.2 AUTOMATIC VOLTAGE REGULATOR (AVR)

The fully sealed Automatic Voltage Regulator maintains the Voltage Regulation at ±1%. Nominal adjustment by means of a trim pot incorporated on the AVR.

8. MOUNTING ARRANGEMENT

8.1 COUPLING

- The Engine and Alternator are directly coupled by means of an SAE flange. The Engine flywheel is flexibly coupled to the Alternator rotor.

8.2 ANTI-VIBRATION MOUNTING PADS

- Anti-Vibration pads are affixed between the Engine/ Alternator feet and the Basetrame thus ensuring complete vibration isolation of the rotating assembly.

8.3 SAFETY GUARDS

- The Fan & Fan Drive along with the Battery Charging Alternator are Safety Guard protected for personnel protection.

9. FACTORY TEST

- The Generating set is load tested before dispatch
- All protective devices control functions and site load conditions are simulated. The generator and its systems are checked before dispatch.

10. EQUIPMENT FINISHING

All mild steel components are fully degreased and painted with powder coated paint to ensure maximum scuff resistance and durability.

11. DOCUMENTATION

Operation & Maintenance manual, Circuit wiring diagrams and Commissioningl/Fault Finding instruction leaflets are accompaniedwith the Generator.

12. QUALITY STANDARDS

The equipment meets the following standards: B84999, B65000, BS5514 IEC 60034, VDE0530, NEMA MG 1.22 and ISO8528.

13. WARRANTY

All of the Generating Sets are covered under a warranty policy for a period of 12 months or 1000 working hours, Warranty of the equipment is in line with manufacturers warranty terms & conditions.
(check warranty statement for more details, as it may vary for different countries)

In line with continuous product development, we reserve the right to change specifications without notice.

STANDARD GENERATOR DIMENSION

Open type Generator

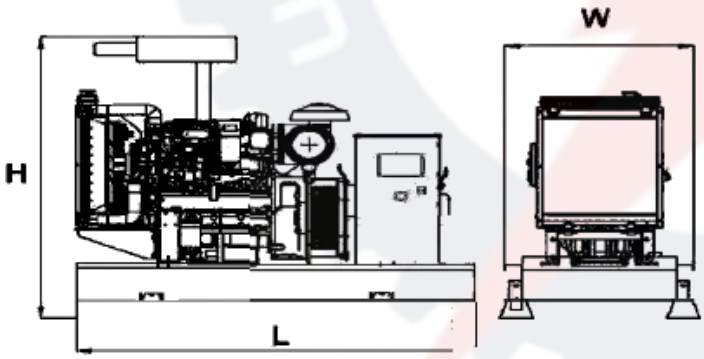

Length, L: **1700 mm**

Height, H: **1250 mm**

Width, W: **850 mm**

Weight: **700 kg**

Close type Generator

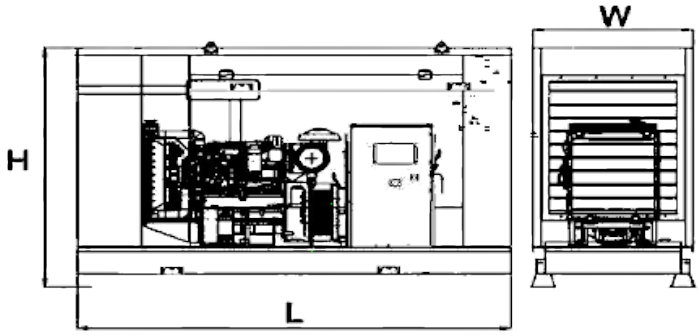

Length, L: **2100 mm**

Height, H: **1500 mm**

Width, W: **950 mm**

Weight: **900 kg**

Tel: +971 6 5570722
Fax: +971 6 5570733
P.O. Box: 122333
F3-18, Sharjah Airport Free Zone (SAIF Zone)
E-mail: info@upsgenerator.com
Web: www.upsgenerator.com